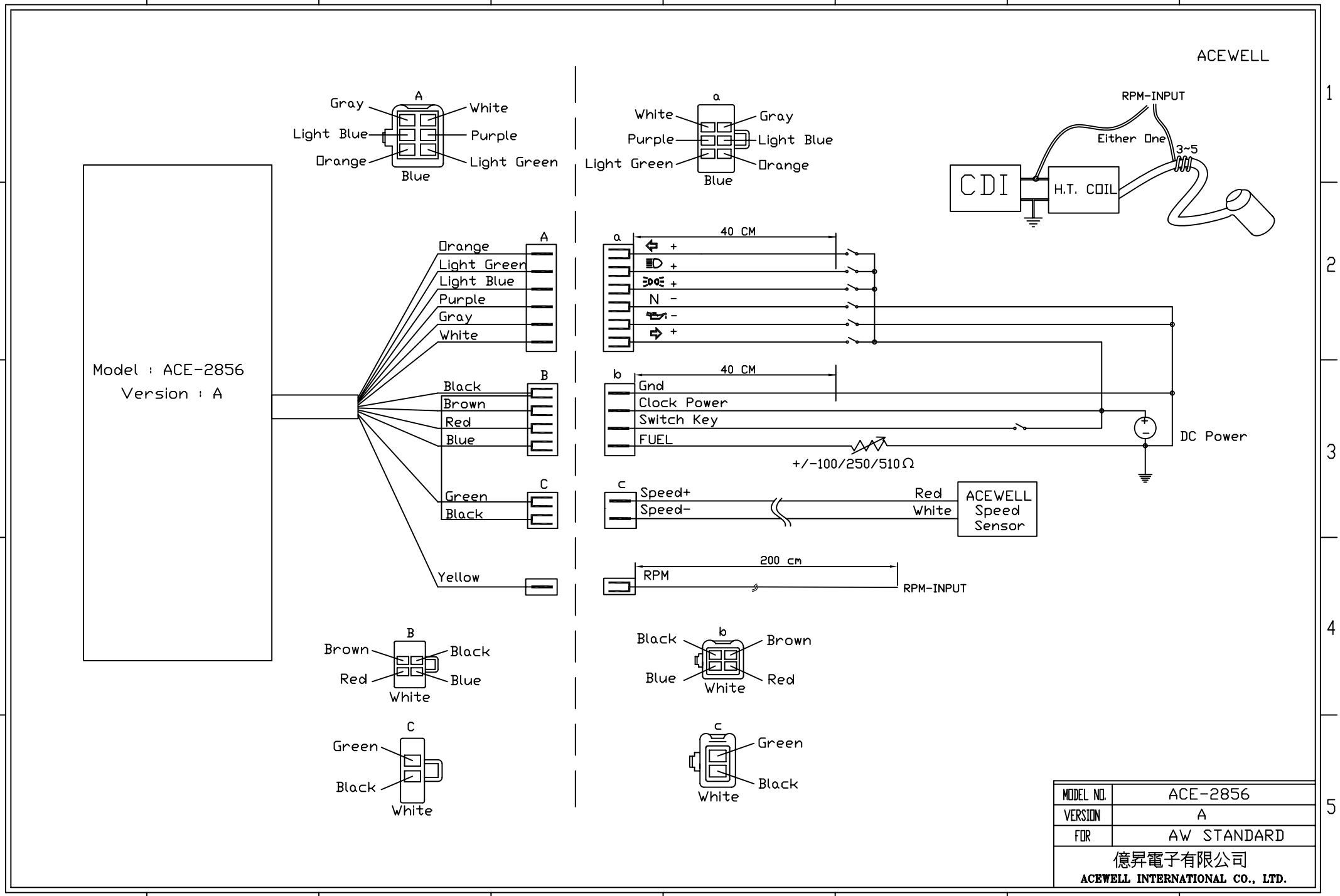
ACEWELL
Model : ACE-2856
Version : A
A
Gray
White
Light Blue
Purple
Orange
Light Green
Blue
a
White
Gray
Purple
Light Blue
Light Green
Orange
Blue
RPM-INPUT
Either One
3~5
CDI
H.T. COIL
Orange
Light Green
Light Blue
Purple
Gray
White
40 CM
N
Black
Brown
Red
Blue
Green
Black
Yellow
b
Gnd
Clock Power
Switch Key
FUEL
+/-100/250/510Ω
DC Power
c
Speed+
Speed-
Red
White
ACEWELL Speed Sensor
200 cm
RPM
RPM-INPUT
B
Brown
Black
Red
Blue
White
C
Green
Black
White
Black
Brown
Blue
Red
White
Green
Black
White
MODEL NO. ACE-2856
VERSION A
FOR AW STANDARD
億昇電子有限公司
ACEWELL INTERNATIONAL CO., LTD.